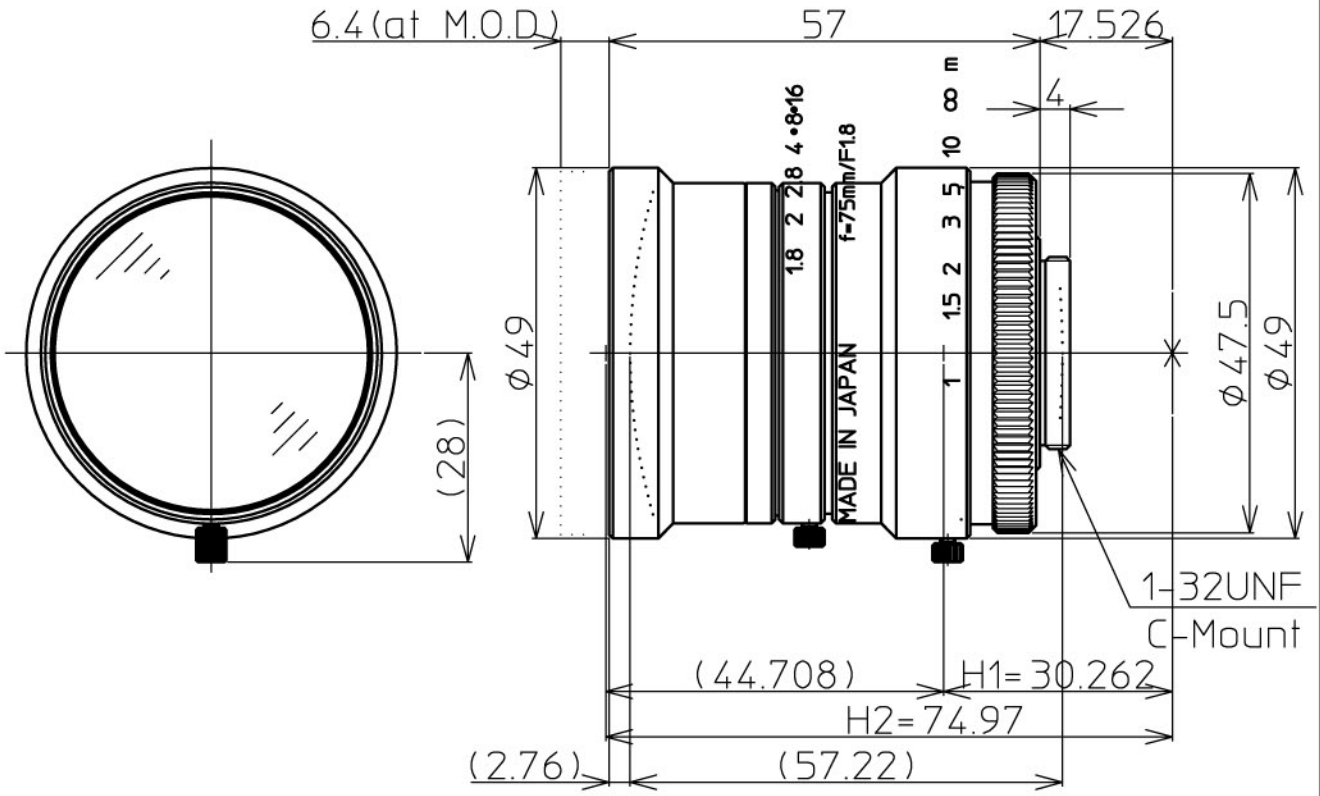

1" 1.8/75mm		2/3"	1/2"
FOCAL LENGTH	f=75mm		
MAX. DIAMETER (RATIO)	F=1:1.8~16		
PICTURE SIZE	12.8x9.6mm	8.8x6.6	6.4x4.8
ANGLE VER. ANGLE	7.3°	5.03°	3.66°
HOR. ANGLE	9.7°	6.68°	4.87°
DIA. ANGLE	12.0°	8.33°	6.08°
DISTORTION (TV)	-0.2%	-0.05%	-0.02%
MINIMUM FOCUS DISTANCE	1m		
FLANGE BACK	17.526 mm in air		
BACK FOCUS	14.5mm in air		
FILTER SCREW SIZE	M46x0.75		
FRONT/REAR EFFECTIVE DIA.	Front φ41.2mm Rear φ16.0mm		
MOUNT	C-MOUNT		
EXIT PUPIL	-55.3mm		
TEMPERATURE RANGE	-10~+45° C		
STORAGE TEMPERATURE RANGE	-40~+60° C		
RESOLUTION	Center 120lp/mm Corner 80lp/mm		
WEIGHT	180g		

Kowa

2011.06.07

LM75HC

1" F1.8 f=75mm